TATA STEEL

TATA

Multi-product Load Restraint

Alan White CEng FIMechE FSOE FIRTE
Lead Load Restraint Engineer
Tata Steel Europe

Past incidents

Past incidents

Past incidents

Tata Steel aims

1. To develop fully engineered and tested Load Restraint Guidelines for all Tata Steel Europe steel products transported by road
   - To meet EN 12195:2010 requirements
   - 90+ product load types identified
2. Improve the standard of load restraint across the company and its hauliers
   - Restraint methods
   - Equipment
   - Compliance

Tata Steel approach

- Tata Steel has established a cross-company **Engineering Team** to work on Load Restraint of all our steel products moved on the road.

- The engineers will design, test and publish **Load Restraint Guidelines** that meet the international standards.

- Prioritisation of work load is governed by a **company-wide Steering Group** which will also ensure the guidelines are implemented across all areas.

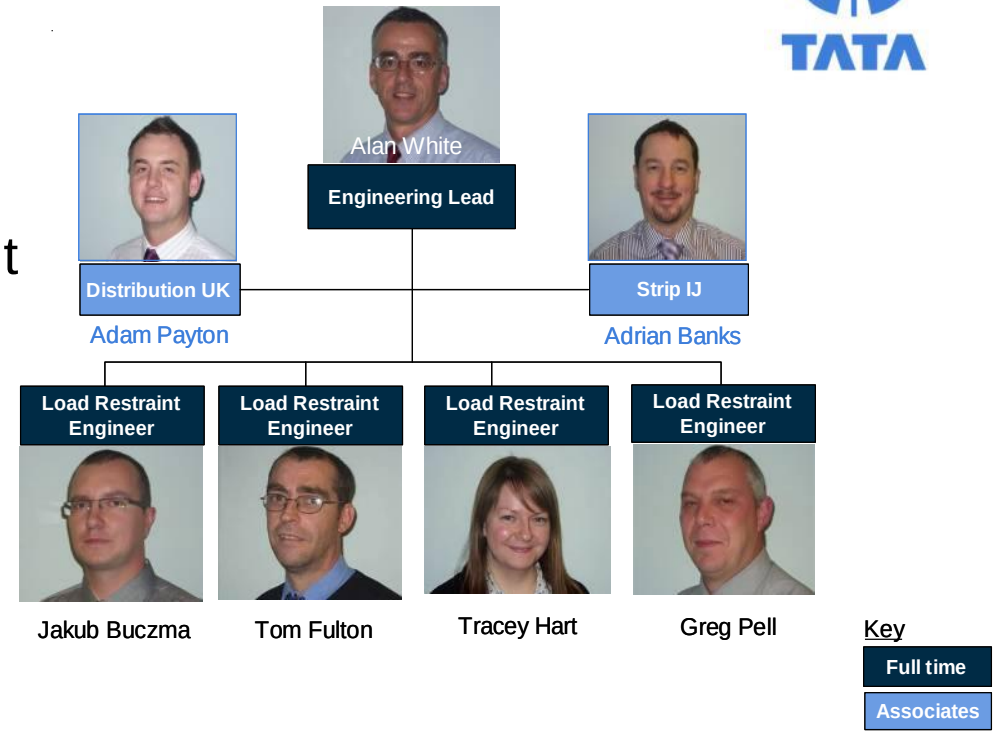

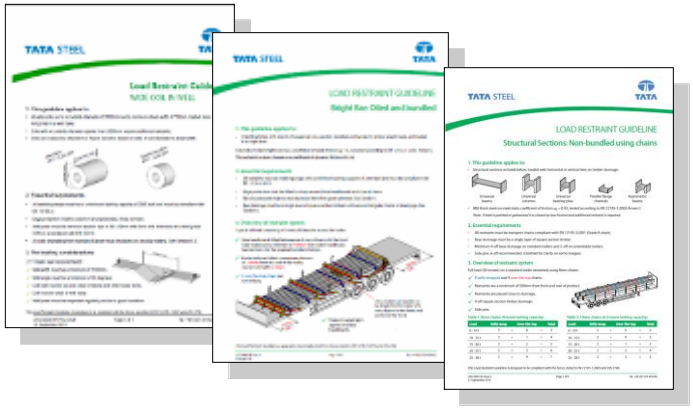

Load restraint
UK Legislation 1 of 3

The extent of UK Law SPECIFIC to Load Restraint is:

Road vehicles (Construction and Use) Regulations 1986 – SI 1986 No 1078

The load carried by a motor vehicle or trailer shall at all times be so secured, if necessary by physical restraint other than its own weight, and be in such a position, that neither danger nor nuisance is likely to be caused to any person or property by reason of the load or any part thereof falling or being blown from the vehicle or by reason of any other movement of the load or any part thereof in relation to the vehicle.

Load restraint
UK Legislation 2 of 3

In addition we have:

Regulation 40A of the Road Traffic Act 1988 introduced by the Road Traffic Act 1991

A Person is guilty of an offence if he uses, or causes or permits another to use, a motor vehicle or trailer on a road when: ….

… the weight, position or distribution of its load, or the manner in which it is secured,

is such that the use of the motor vehicle or trailer involves a danger of injury to any person.

Load restraint
UK Legislation 3 of 3

We also have the Health & Safety at Work Act 1974:

- **Case law has been built that instils a duty of care on the loader.**
- **Loads cannot knowingly be built in a manner that is unsafe or that cannot be secured in a safe manner.**

The chain of responsibility

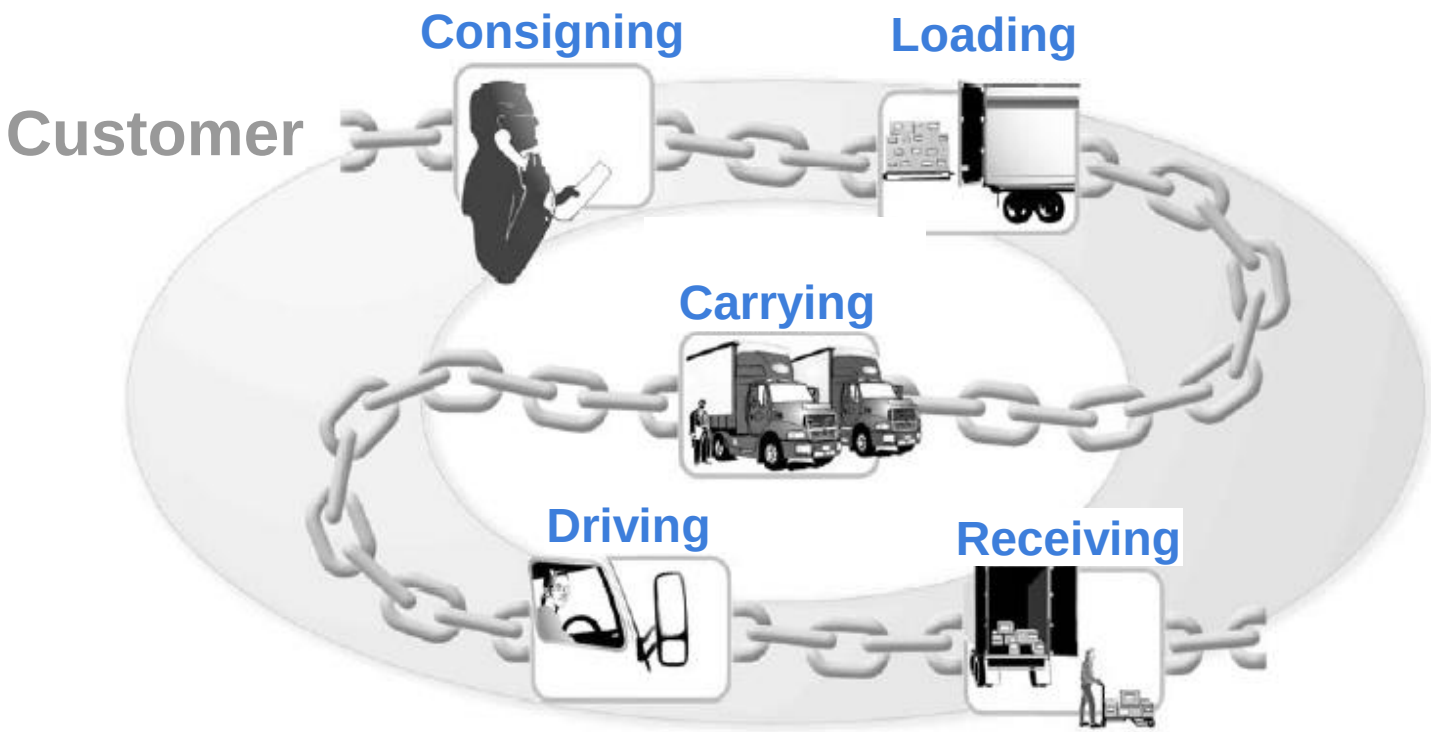

*"A person **is guilty of an offence** if he **uses**, or **causes** or **permits another** to use a motor vehicle or trailer on a road when …*

Load restraint
Key guidance documents

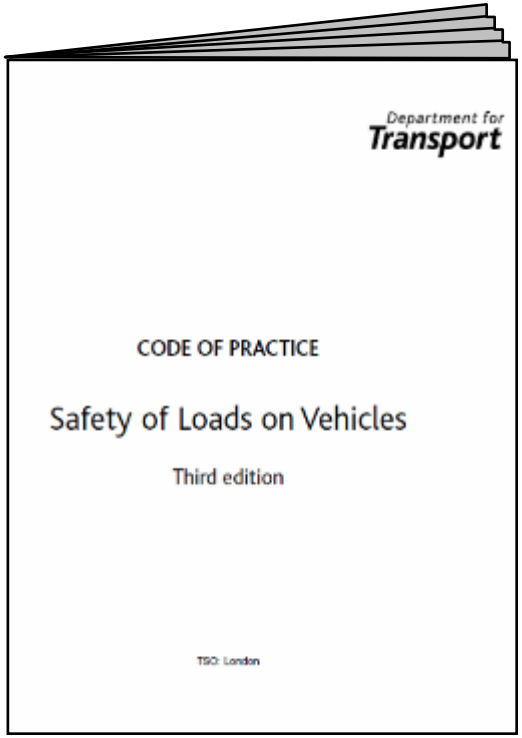

DfT Code of Practice

1st Edition 1972; 3rd Edition 2002

UK

EN 12195-1:2010

EU

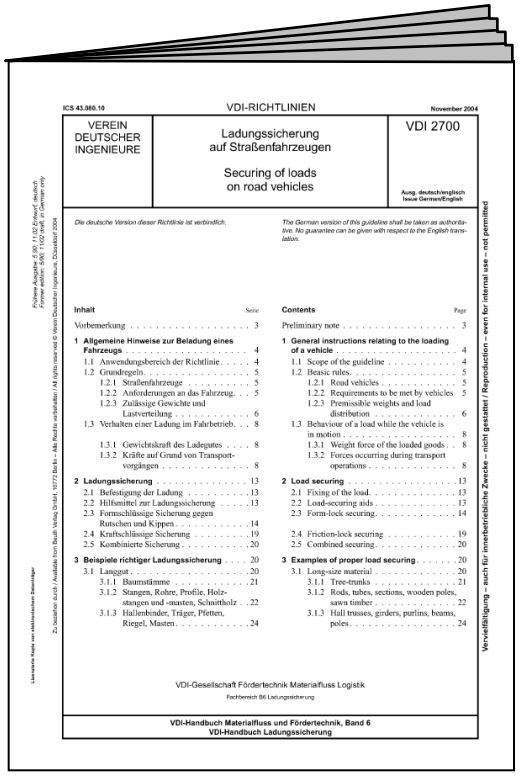

VDI: 2700 2004-11

Germany

Note that UK law does not specifically reference any of these documents, *but the enforcing agencies and court do!*

Load restraint standards – Forces under EN 12195

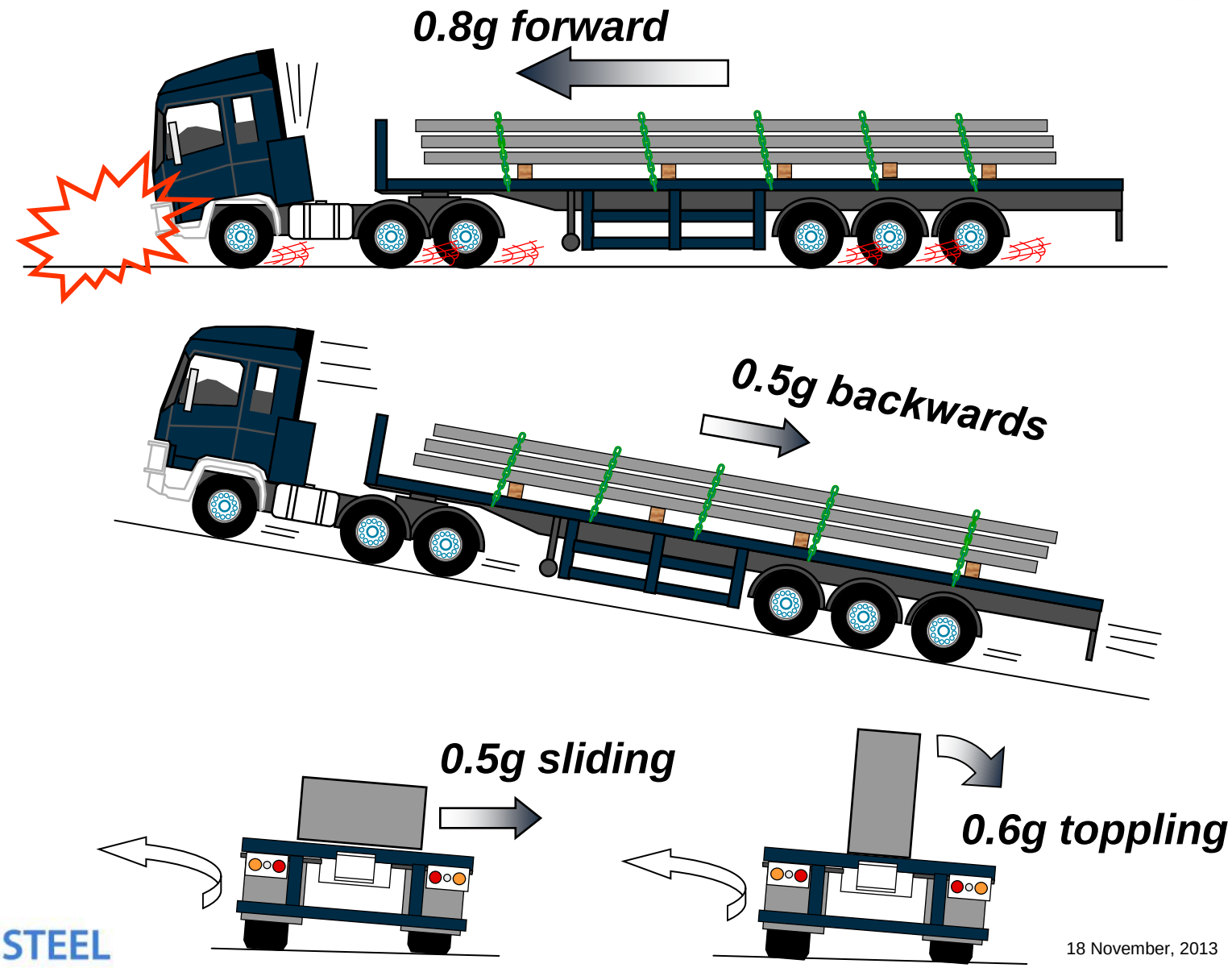

Inclination testing in progress to meet the EN 12195

- Inclined forward to simulate 0.8g
- Inclined sideways to simulate 0.5g for road transport or 0.7g for ferry crossings.
- Rearward checked at 0.5g

Loads are then tested dynamically

- Emergency brake testing are performed – aiming for 0.8g deceleration

Safety headboard

Load cells

Deceleromter

Tata Steel Load Configuration and Restraint Guidelines

- Designed to incorporate the Basic Principles of load restraint into one document for use by sites despatching steel loads.
- The Load Restraint Guidelines address load configuration, as well as load restraint.
- The Multi-Products Load Restraint Guideline LRG-0014-MP:
  - The first side of the document presents the principles to be adhered to when configuring a load, as well as practices to be avoided.
  - The second side of the document discusses the minimum restraint requirements and provides illustrations of the key points.
  - This Load Restraint Guideline is about adopting the essential requirements for good load restraint, and cutting out the bad practices.
  - **This Load Restraint Guideline cannot cover all scenarios of multi-products loads, however it presents the basic principles that must be adhered to.**

Break-out session

TATA STEEL

TATA

LRG-0014-MP

Multi-product Load Configuration & Restraint Guideline

Multi-products LRG
When does it apply?

- This Load Restraint Guideline applies to all loads consisting of a variety of product types, which may include, but are not limited to:
  - Beams and columns
  - Angles
  - Pipe
  - Tubes
  - Bar
  - Plate
  - Flats

- Where a load consists entirely of Sections, or Tubes, or Sheet Packs then the relevant Load Restraint Guideline must be used.

Vehicle requirements

- Headboard must be 1.5 metres high or greater than height of the material.
- Trailer must be fitted with a minimum of 6 pairs of side pins at least 1 metre in height.
- Base dunnage must be 150 mm square timbers minimum.
- All gantries must have fixed timbers 100 mm square minimum.
- Trailer deck must be free from holes and be in good condition.
- Well boards of coil carrier trailers must be fitted and in good condition where material is being loaded on top.

Vehicle types
Coil well trailers

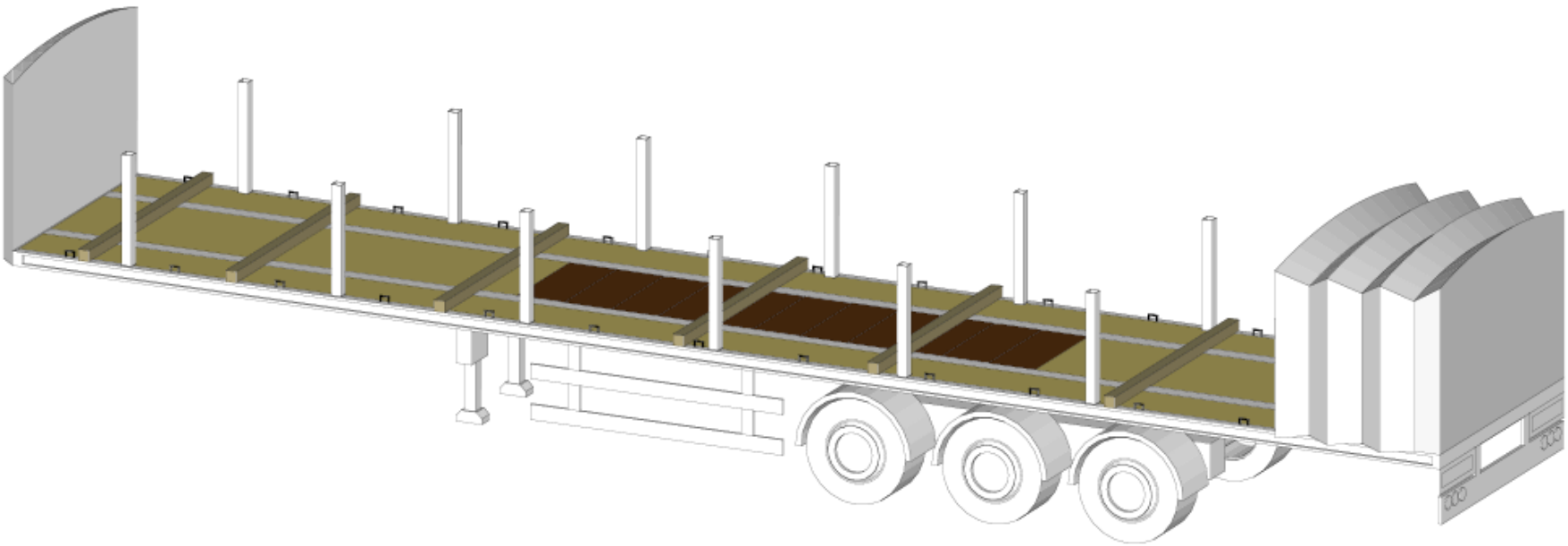

- Well boards of coil carrier trailers must be fitted and in good condition where material is being loaded on top.

Vehicle requirements
Rigids and trailers

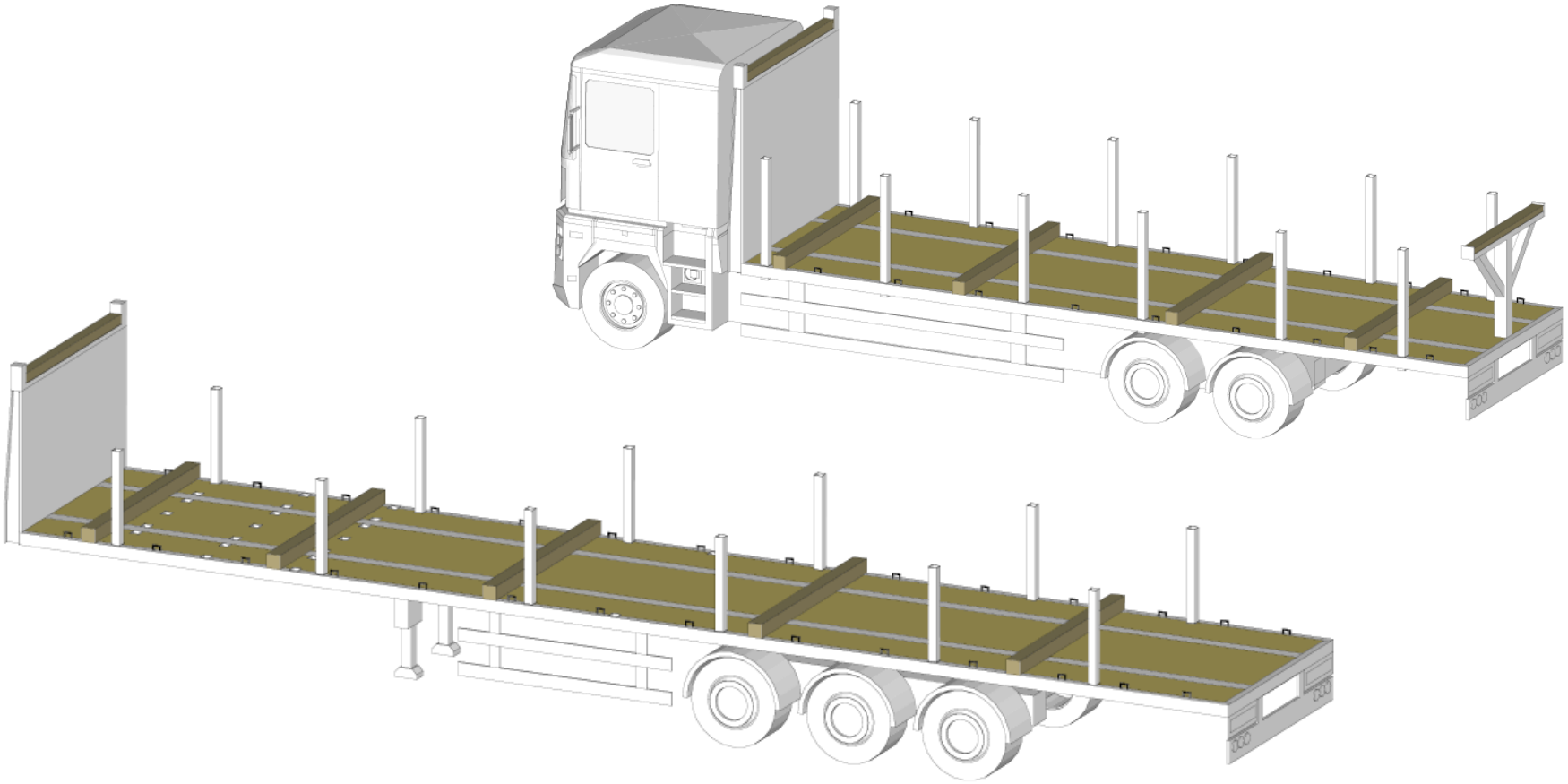

- All gantries must have fixed timbers 100 mm square minimum.

Vehicle requirements
Extendable trailers

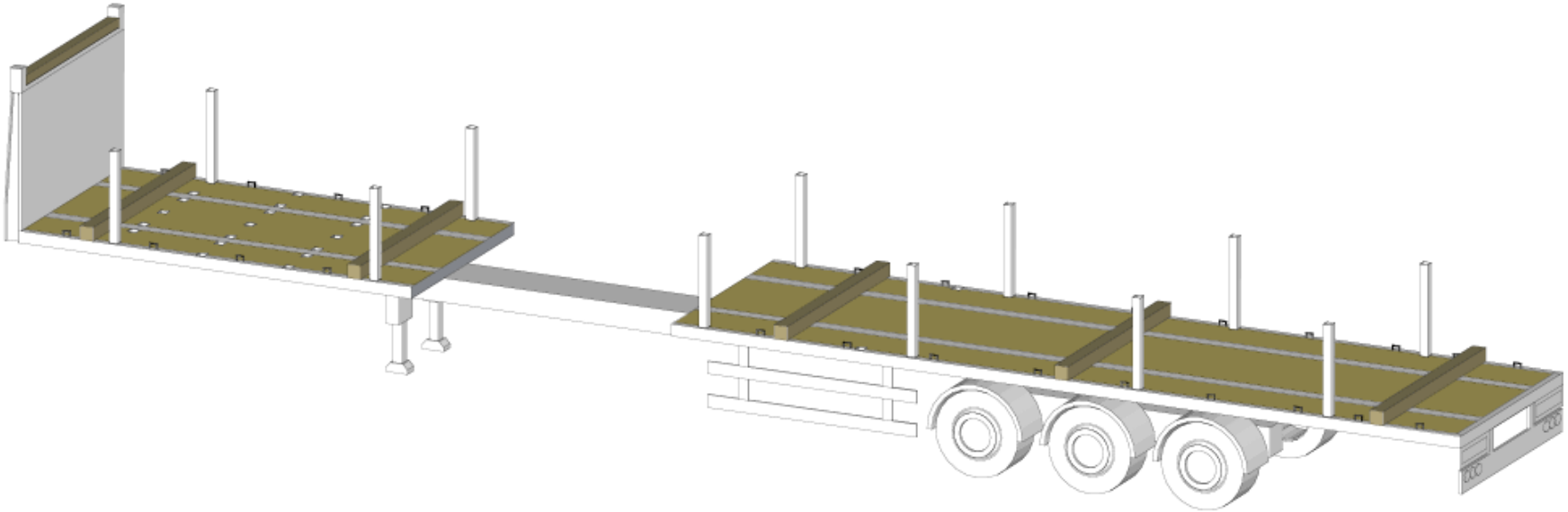

- Overhead material is NOT permitted when trailer is extended.
- All gantries must have fixed timbers 100 mm square minimum.

Loading overhead

Minimum and maximum projections

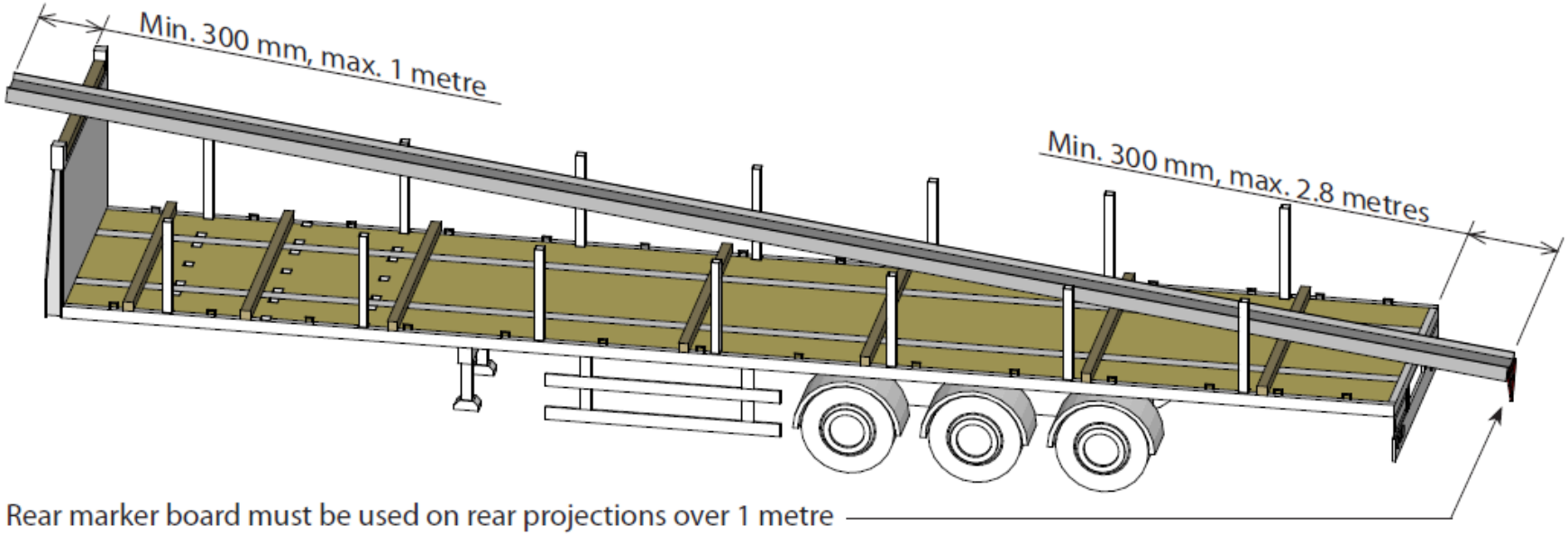

Loading standards
Light sheet and plate

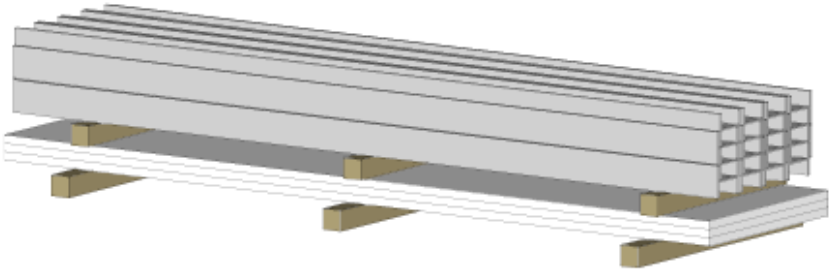

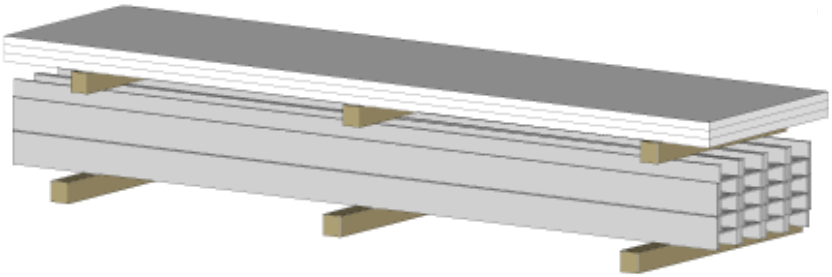

Loading standards
Light sheet and plate

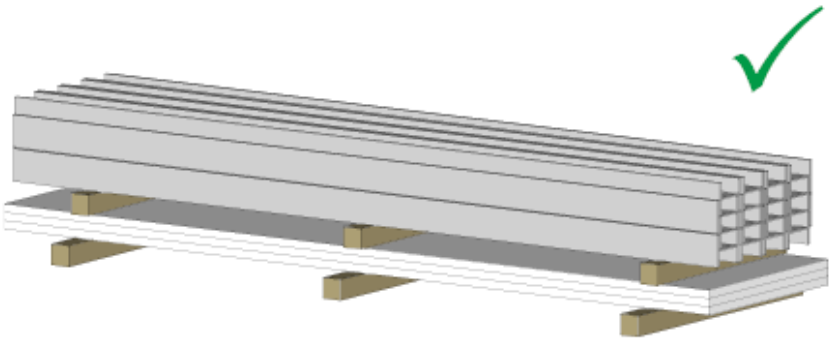

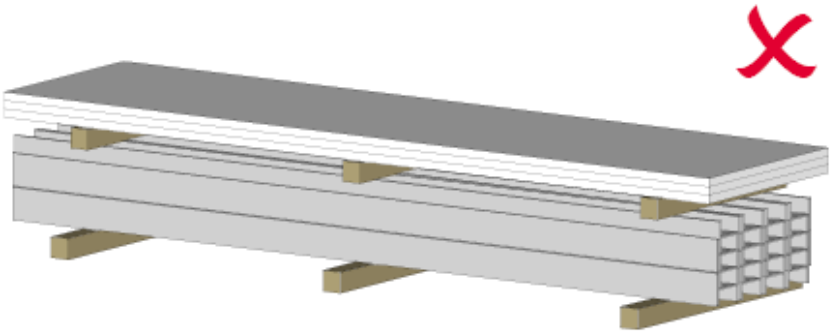

- Light sheet and plate to be loaded first, onto the base timbers.

Loading standards
Palletised goods

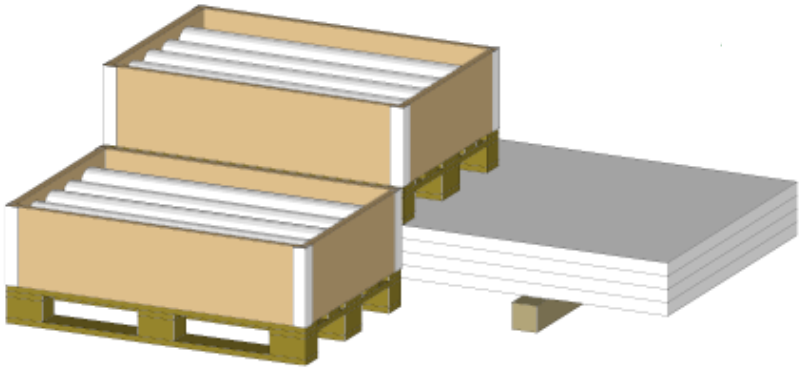

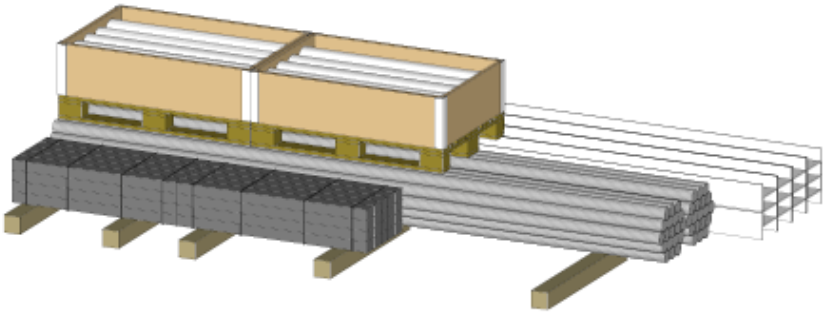

Loading standards
Palletised goods

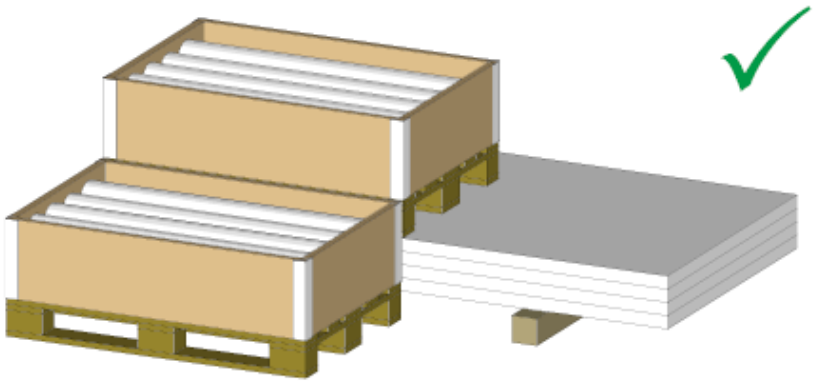

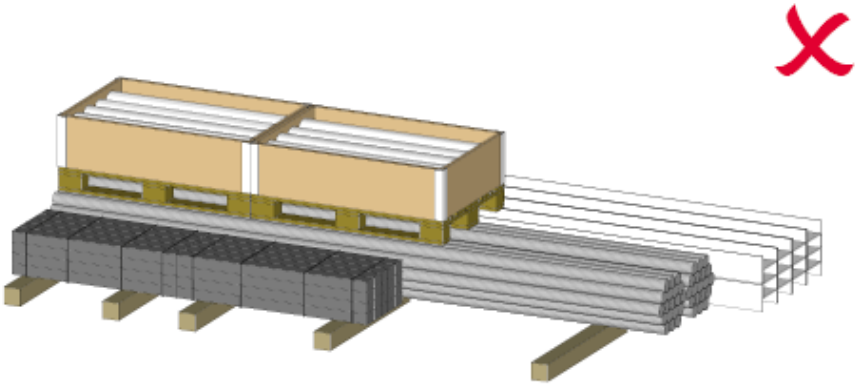

- Pallets may only be placed directly on the trailer deck, or on top of plates if appropriate.
- Consider use of anti-slip matting beneath shrink-wrapped pallets, to overcome low-friction nature of plastic wrap.

Loading standards
Sections

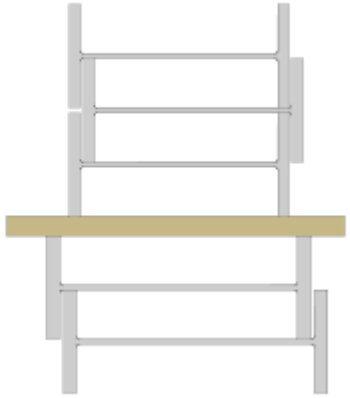

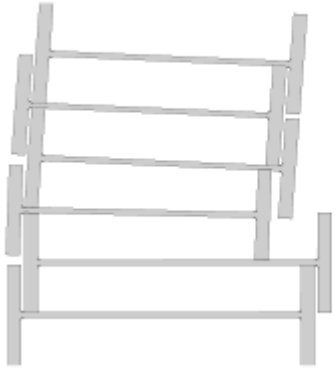

Loading standards
Sections

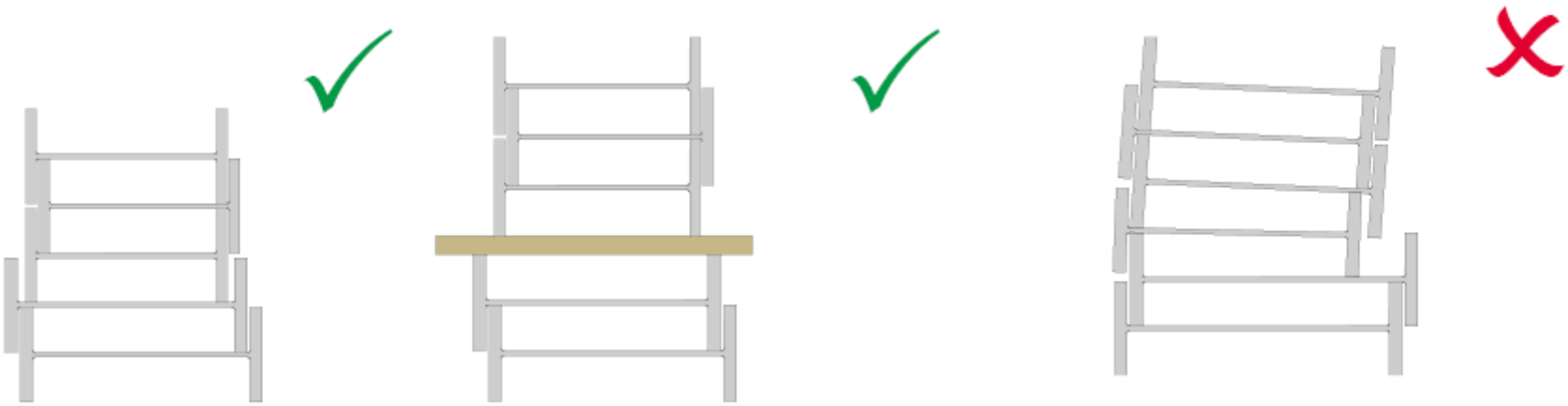

- Sections must be stacked in such a manner so as to maintain a stable configuration.
- Ability for customer to offload must be considered.

Loading standards
Rectangular material

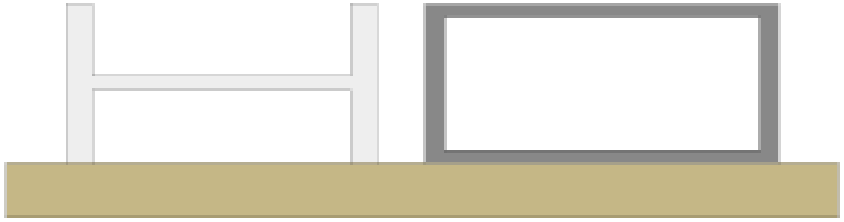

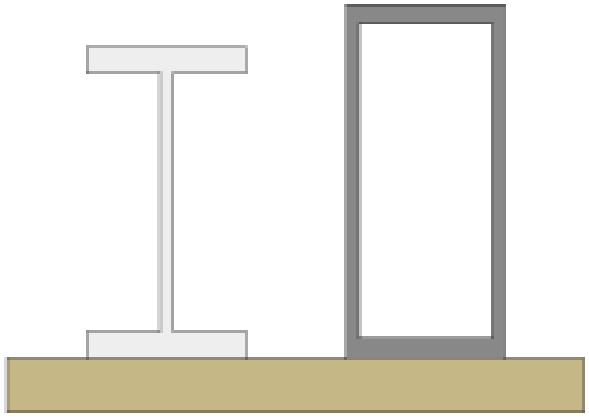

Loading standards
Rectangular material

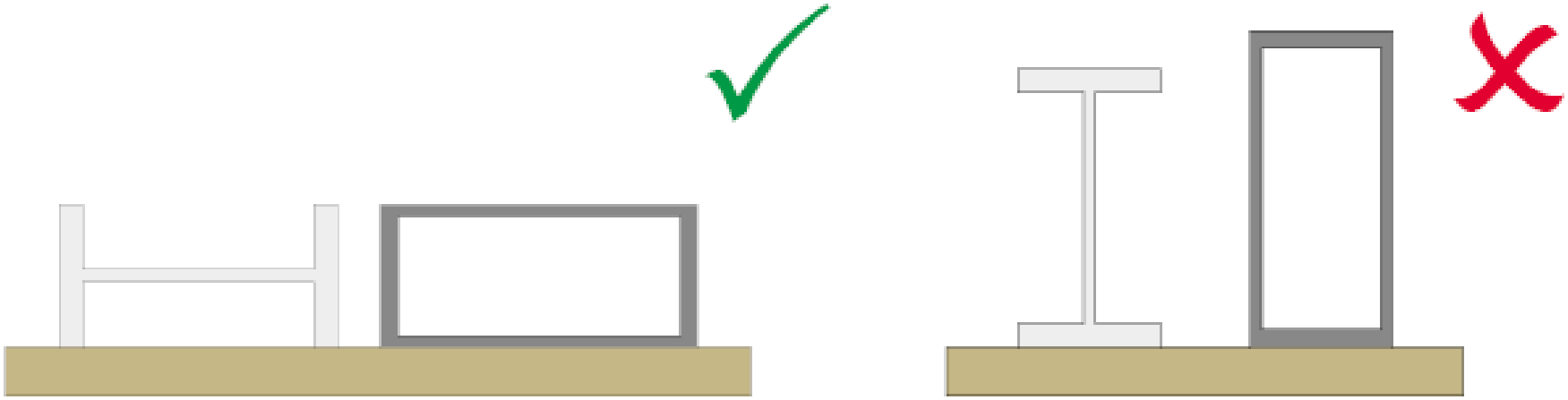

- Rectangular material is to be stored flat.
- Beams and columns are loaded in the ‘H’ orientation and rectangular hollow section with the long edge down.

Loading standards
Rounds

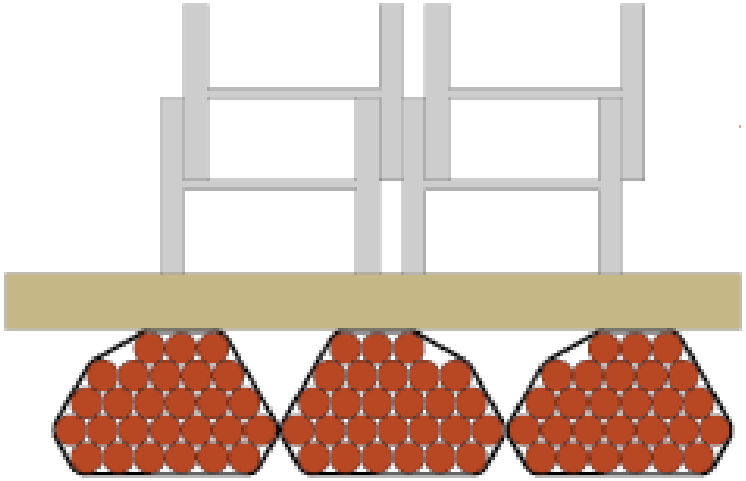

Loading standards
Rounds

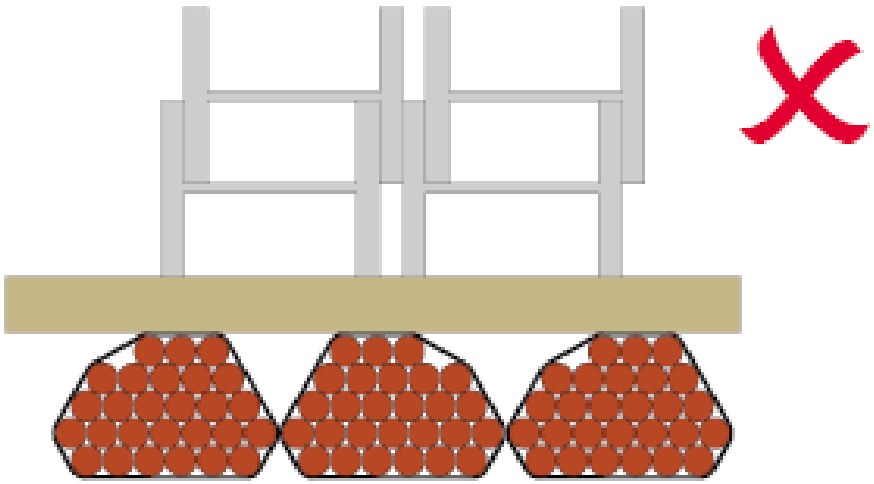

- Do not load on top of round material.
- Round material does not provide a stable base.
- Bundled material may move within the banding causing the entire load to become unstable.

Loading standards
Method of unloading

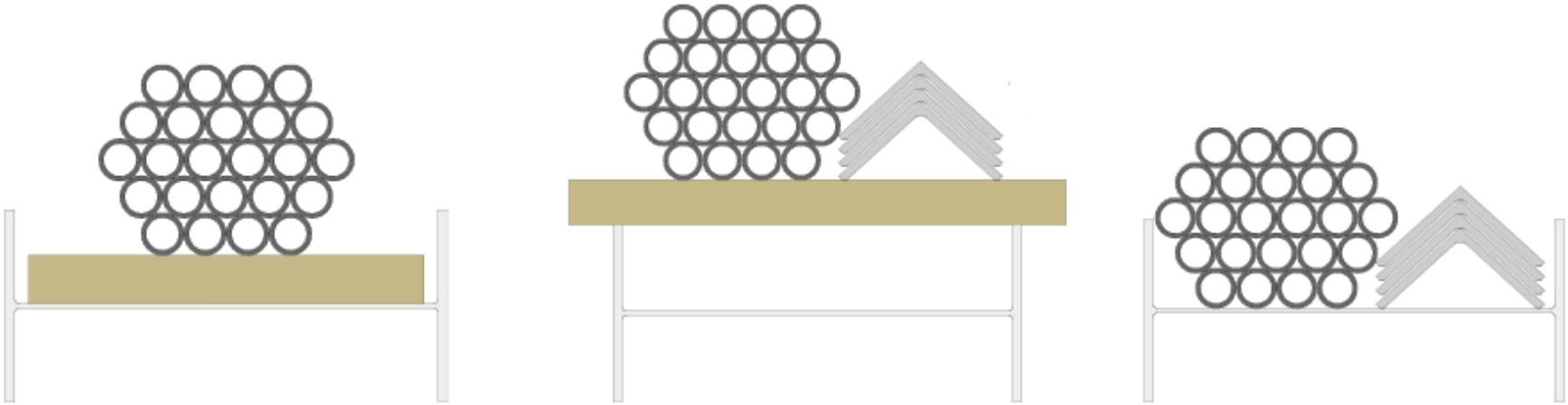

Loading standards
Method of unloading

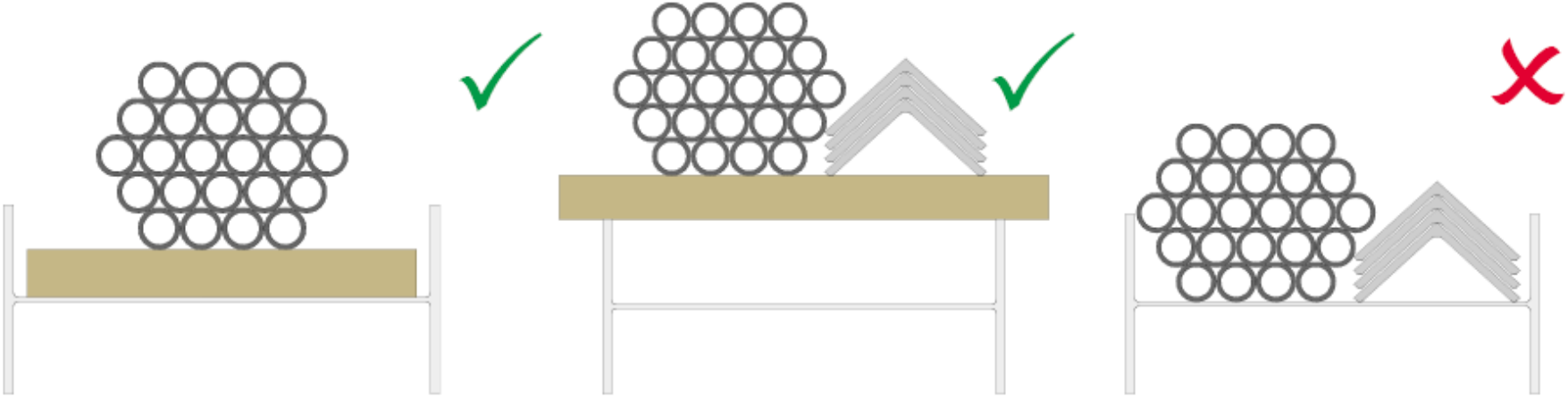

Overhead crane **Forklift**

- The method of unloading can influence how bundles are configured on the vehicle.

Dunnage requirements

Creating levels with timbers

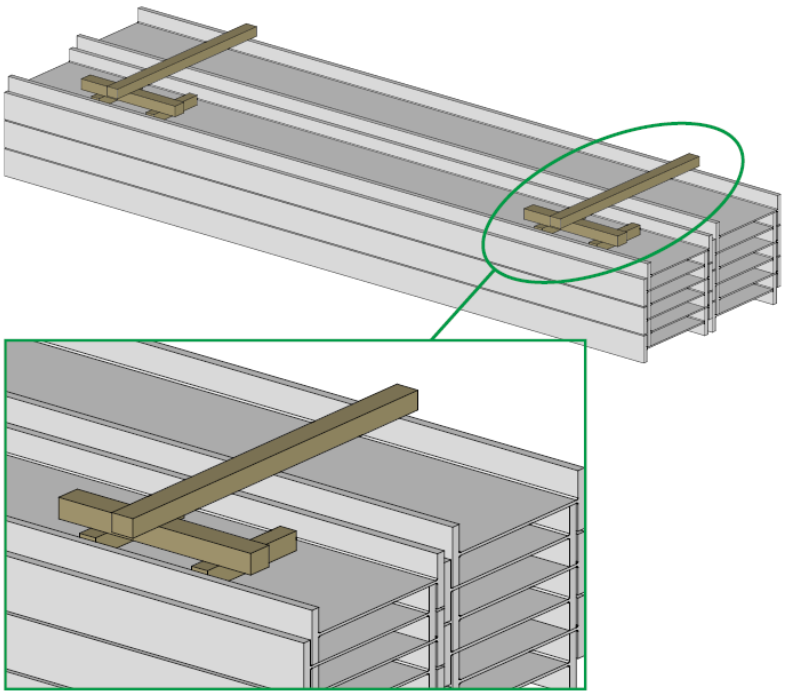

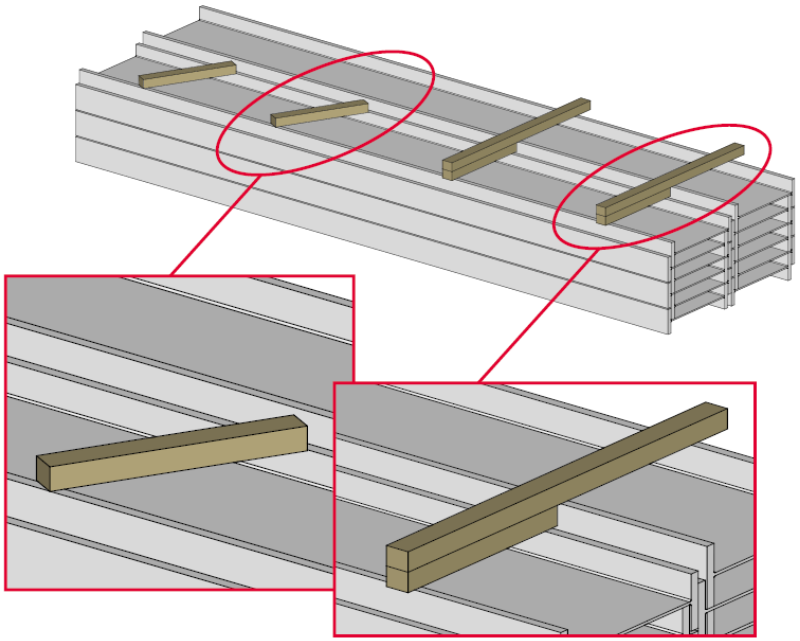

Dunnage requirements
Creating levels with timbers

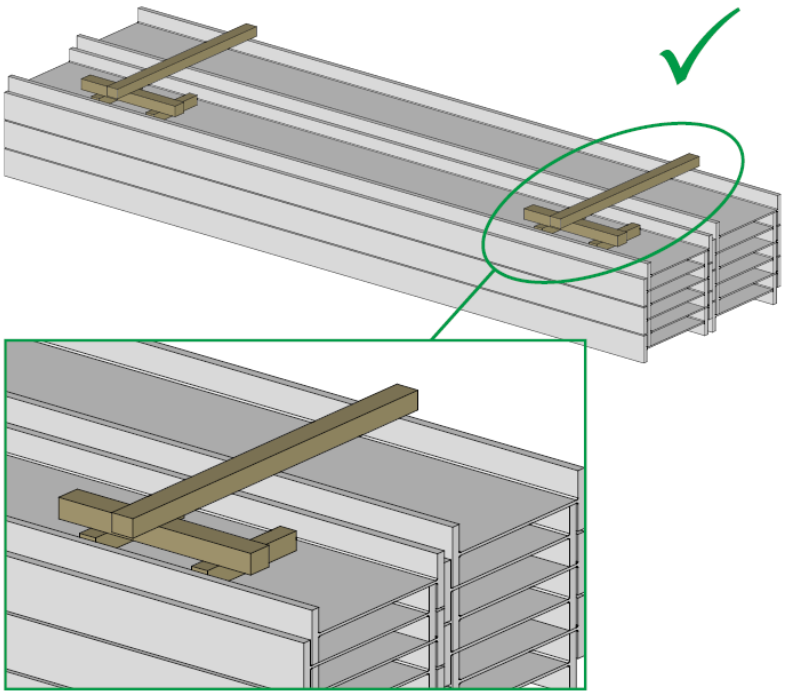

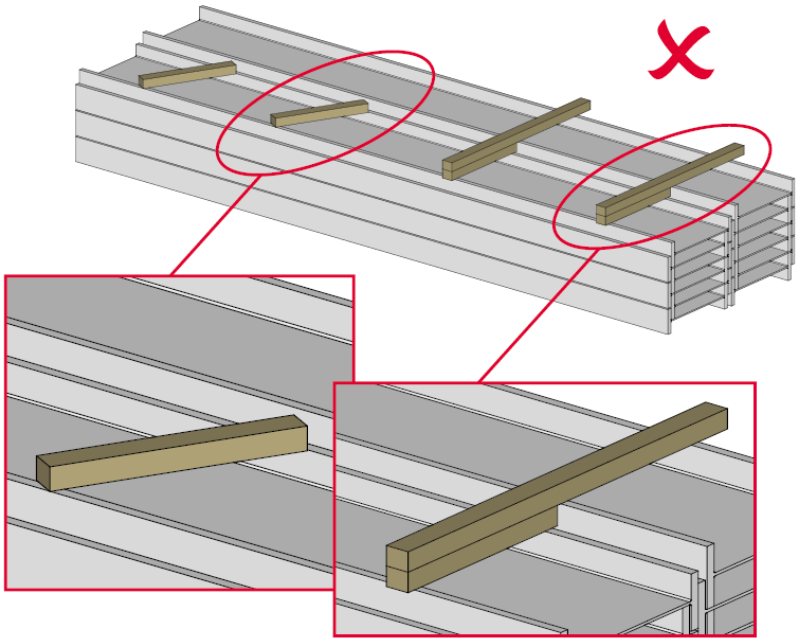

- **Significant change!**
- Double stacking timbers and balancing timbers on flanges of beams can lead to an inadequately supported load.

Dunnage requirements
Chain gaps

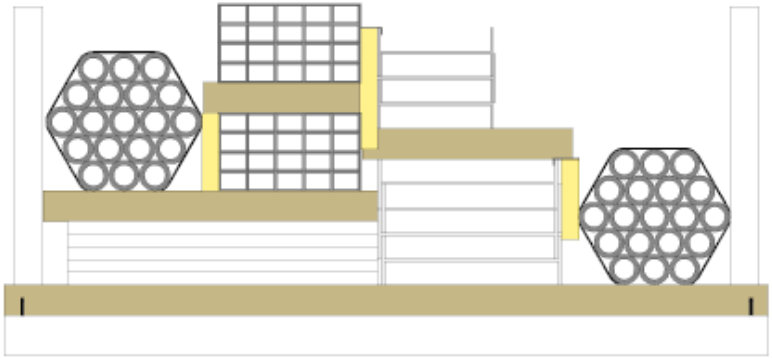

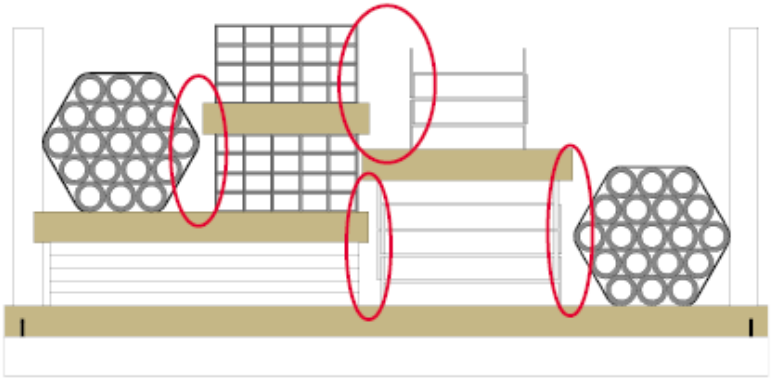

Dunnage requirements
Chain gaps

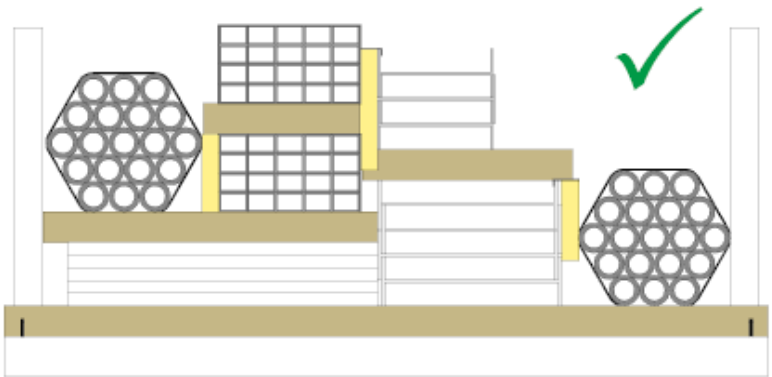

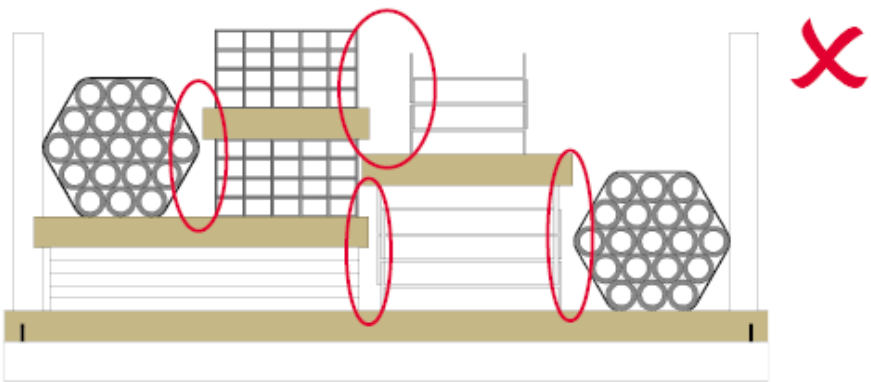

- **Significant change!**
- Where a customer requires gaps between bundles for offloading, or where the method of loading introduces gaps, then these must be controlled with vertical dunnage.
- Gaps can close up during transport resulting in ineffective restraints.

Chain gaps
Alternate methods

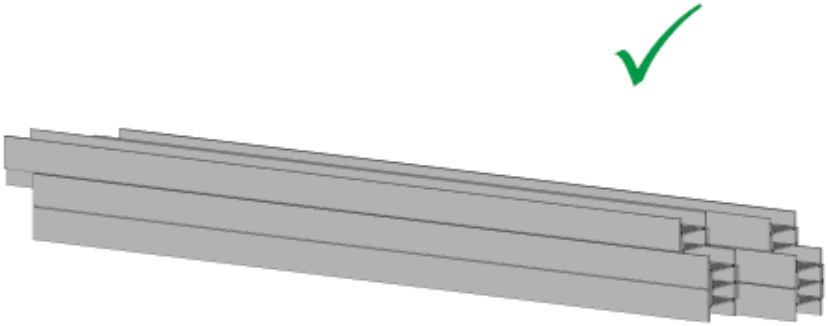

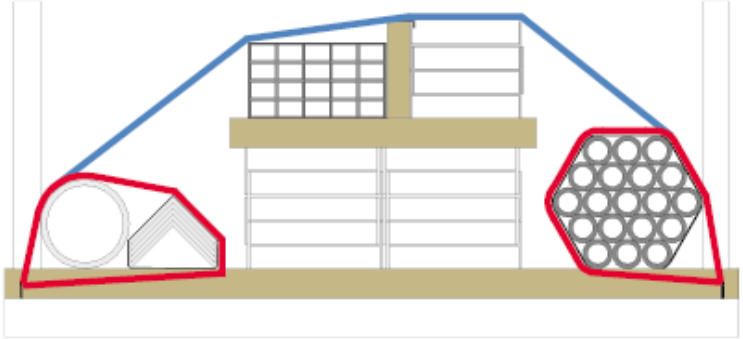

- Stagger and launch is an accepted method of loading without gaps between bundles, whilst still allowing for offload via overhead crane.
- Small bundles of material can also be loaded to the sidepins and restrained with opposing loops, thereby leaving a ‘controlled gap’ to the main part of the load.

Load restraining

Essential requirements
Primary restraints

- A full load to be restrained using a minimum of 6 chains.
  - 8 mm minimum for Grade 80 chain.
  - Chains to EN 12195-3:2001.
- All material must be secured at 2 points minimum.

Essential requirements
Additional restraints

- A particular load configuration may require a greater number of restraints than the 6 primary chains.
- Webbing straps may then be used to secure small packs of material that are not restrained by the 6 chains.
  - Webbing straps are preferably used to restrained material which is blocked at the headboard.
  - Webbing straps must be protected from abrasive surfaces and sharp edges.
  - Do not mix and match chains and webbing straps on same parts of the load.
- **Additional restraint is always required during Severe Winter Weather advisory periods.**

Belly-wrapping

- Over-the-top chains are only good at providing restraint to the product so long as there is sufficient deflection in the chain to provide downward clamping.
  - No deflection in the chain = No downward clamping = No restraint
- Belly-wrapped chains are used when lashing angles are low and help to squeeze the product together into a bundle.

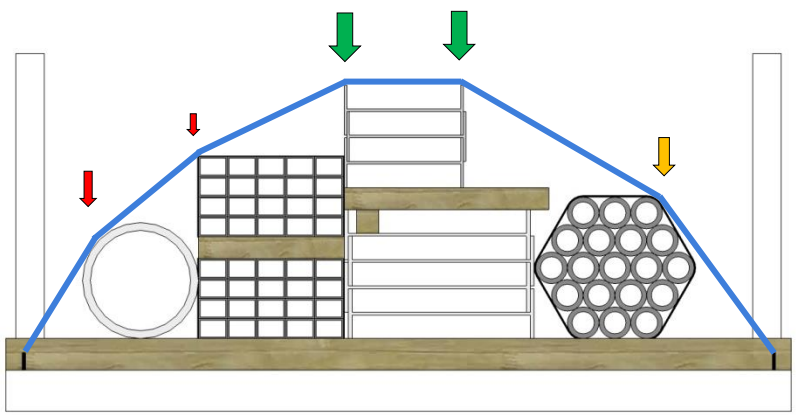

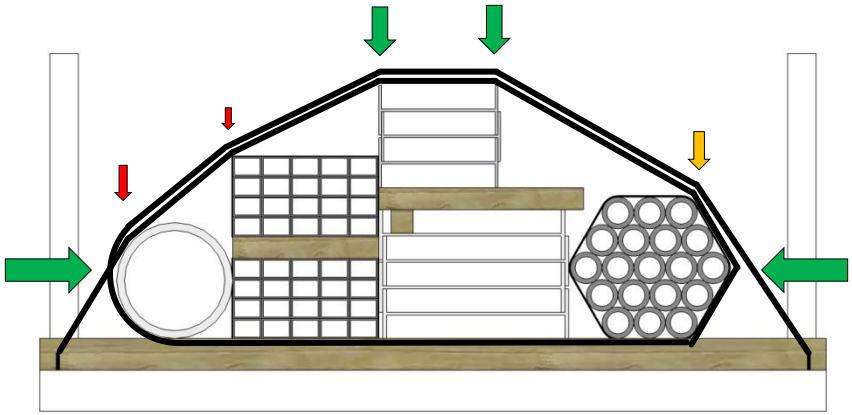

Belly-wrapping

- When lashing angles are low, product can readily slide underneath the restraints.
  - Belly-wraps provide added ‘bite’ to reduce the likelihood of this occurring.
- Belly-wraps require 2 tensioners.
  - One on each side, to eliminate the loss in tension as the lashing goes around the product.

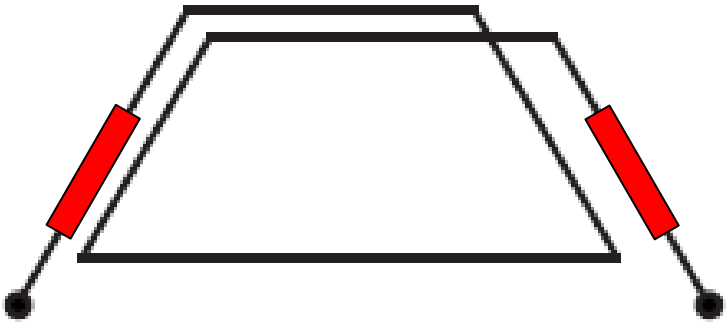

Sample load 1

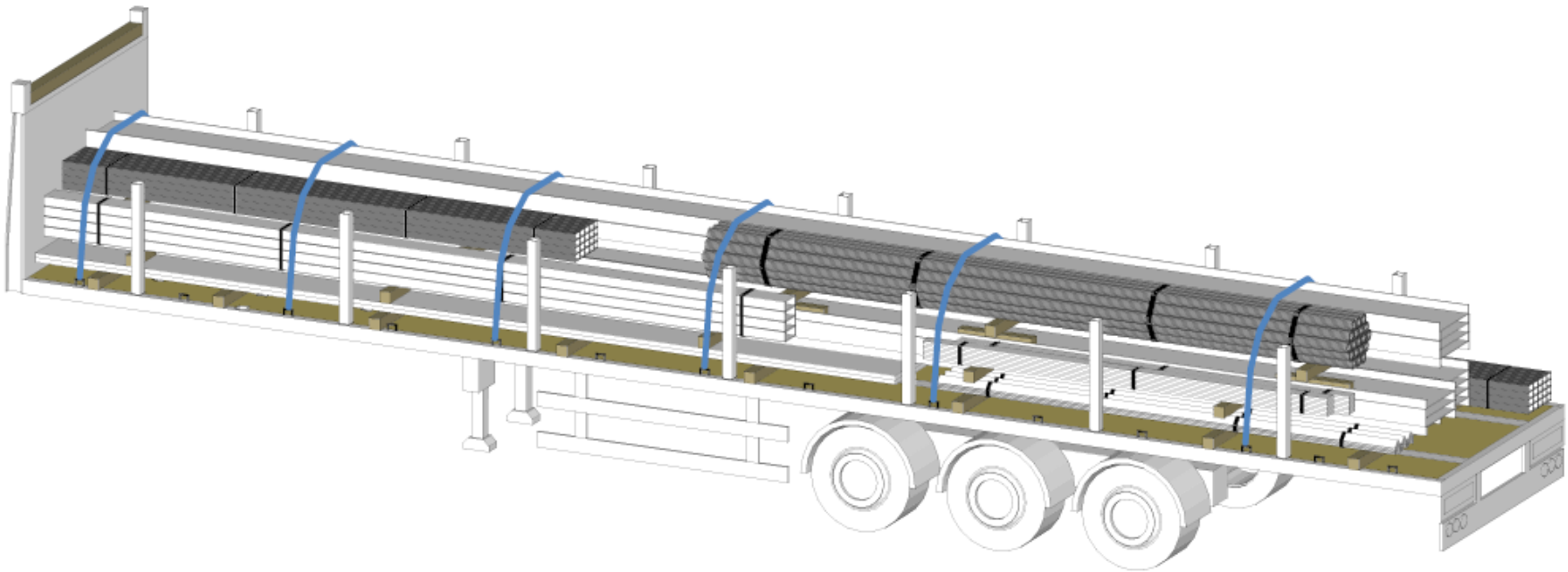

- Load has been built in a pyramid fashion and all parts of the load receive downward clamping from the chains
- Load can be restrained using 6 over-the-top chains.

Sample load 2

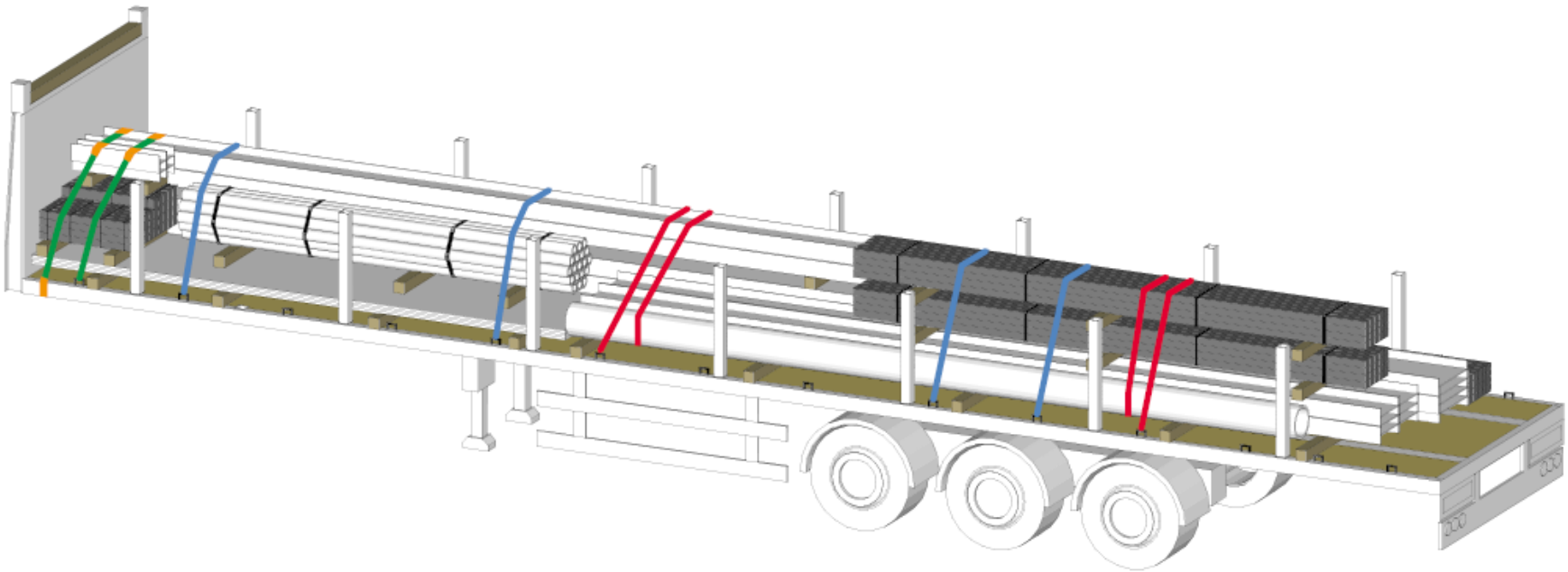

- Load consists of several different lengths of product. 6 chains over-the-top would not provide sufficient restraint to all parts of the load.
- The 6 chains are used to secure the bulk of the load in the middle and at the rear of the trailer.

continued →

Sample load 2
continued

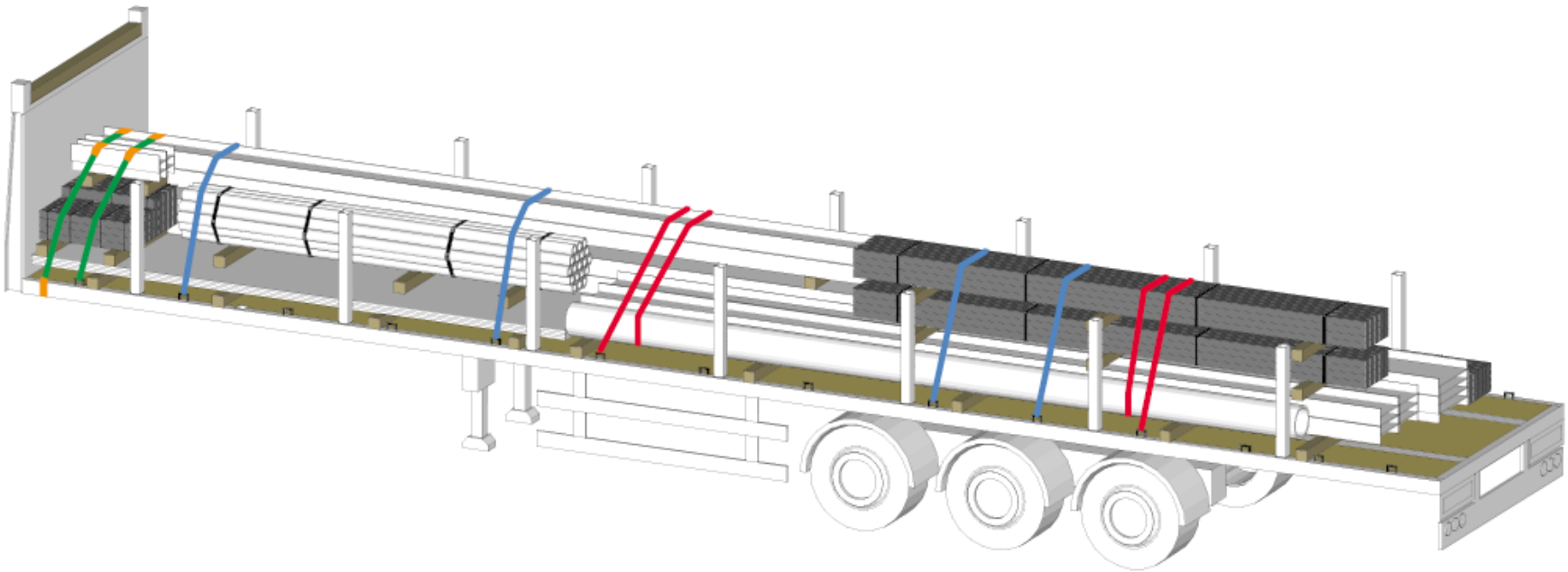

- Belly-wraps are used to pull the pipe on the side against the bulk of the load, which otherwise would have received very little restraint.
- Webbing straps are used to restrain the short bundles loaded against the headboard.

Sample load 3

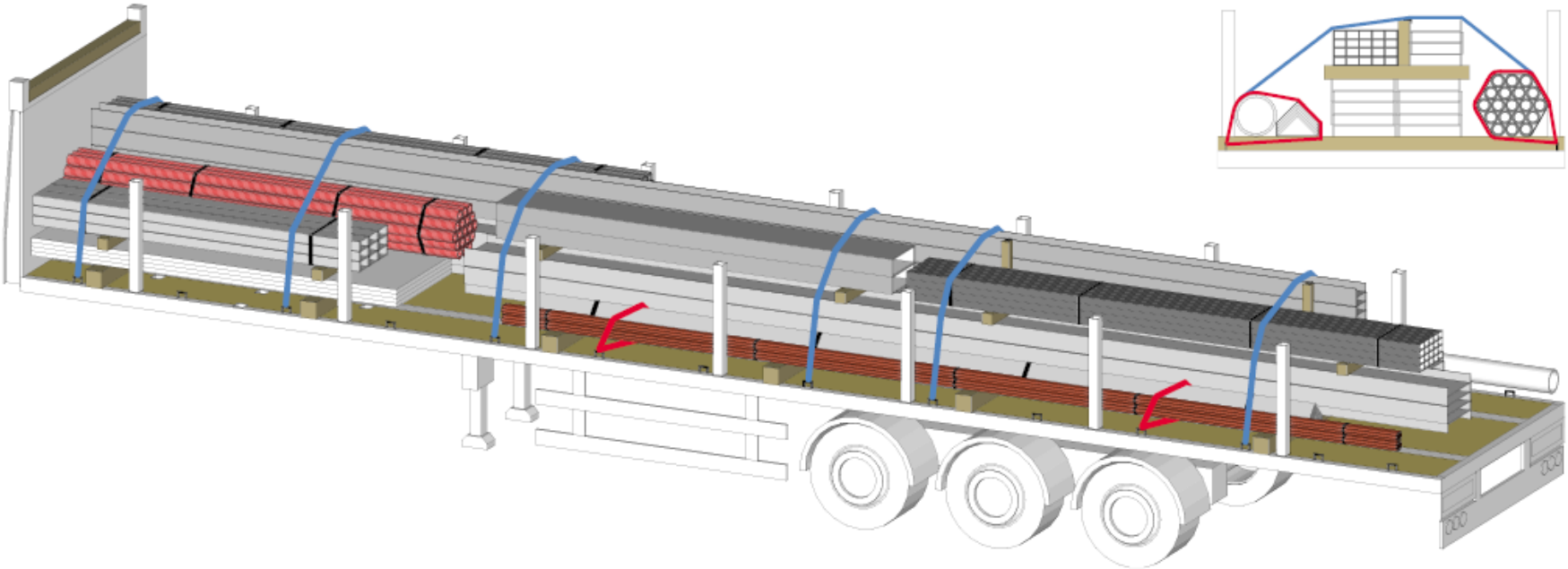

- 6 chains over-the-top have been used to secure the bulk of the load.
- Opposing loops have been used to restrain the small bundles against the side pins, thereby controlling the gaps and allowing for offloading.

Loading overhead

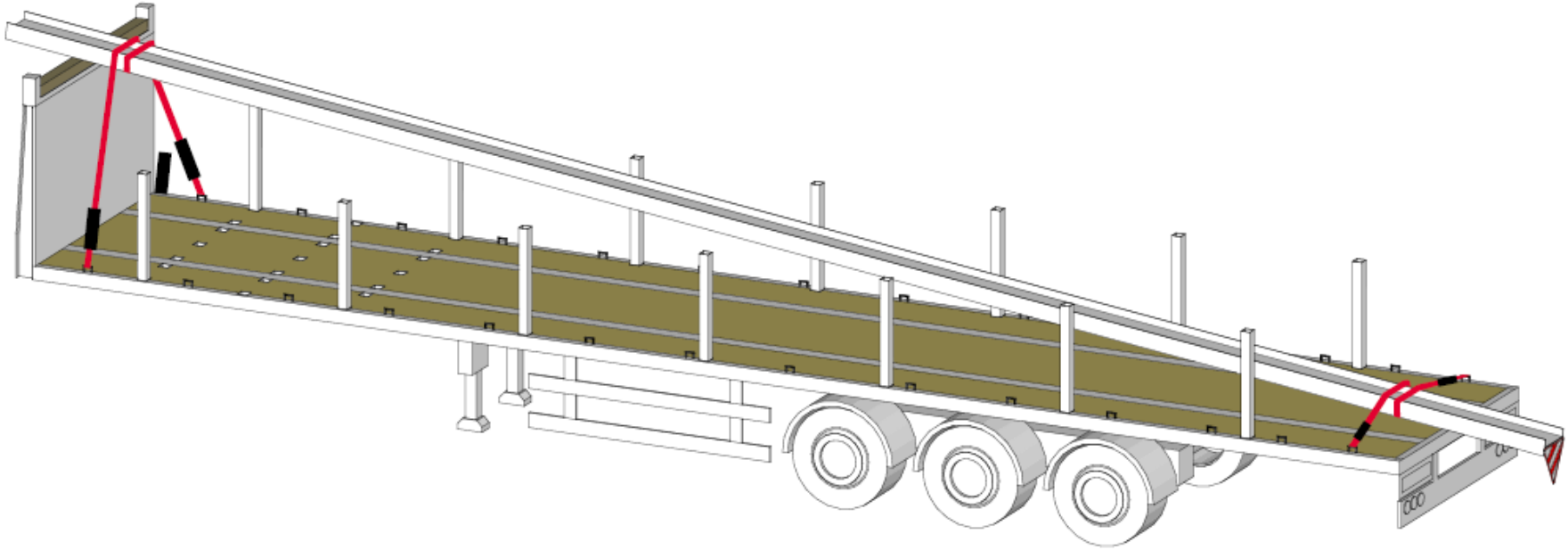

- Items loaded overhead are restrained with a belly-wrap at each end. Restraints are applied as close to the gantry as possible.
- Each belly-wrap requires 2 tensioners, 1 on each side.

Sample load 4

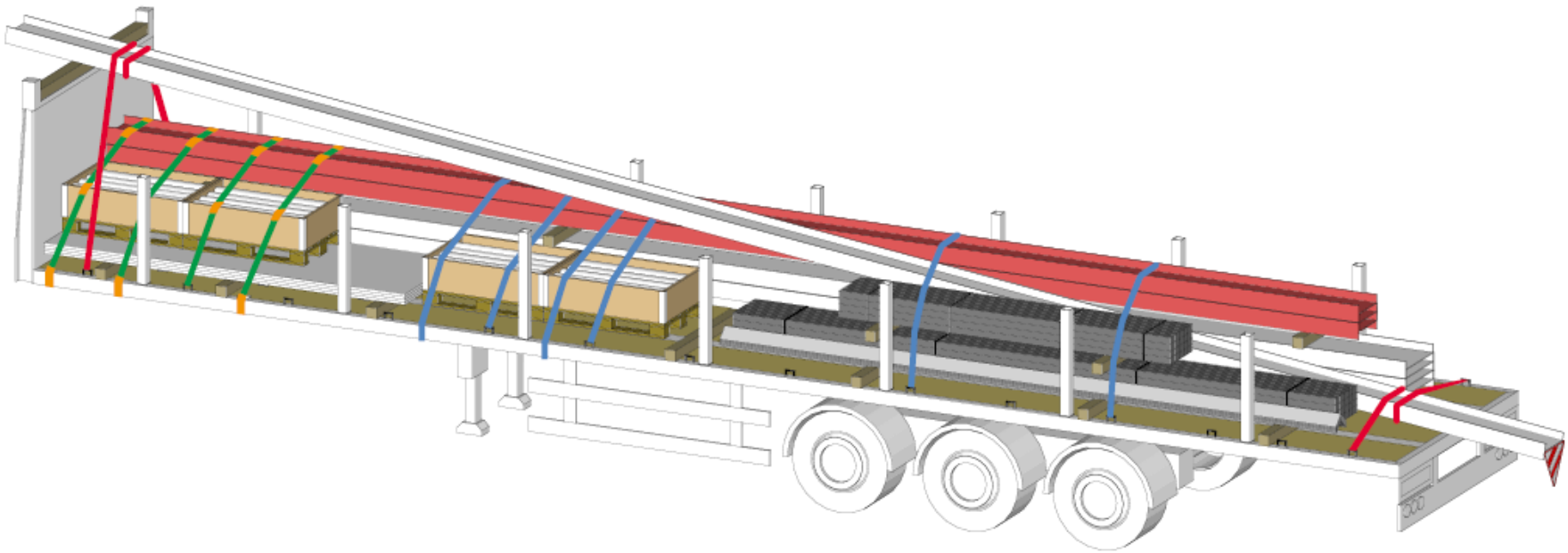

- Overhead material is restrained with a belly-wrap at each end.
- All material is secured at 2 points minimum.
- Webbing straps have been used to restrain product loaded against the headboard.

Loading standards
Light sheet and plate

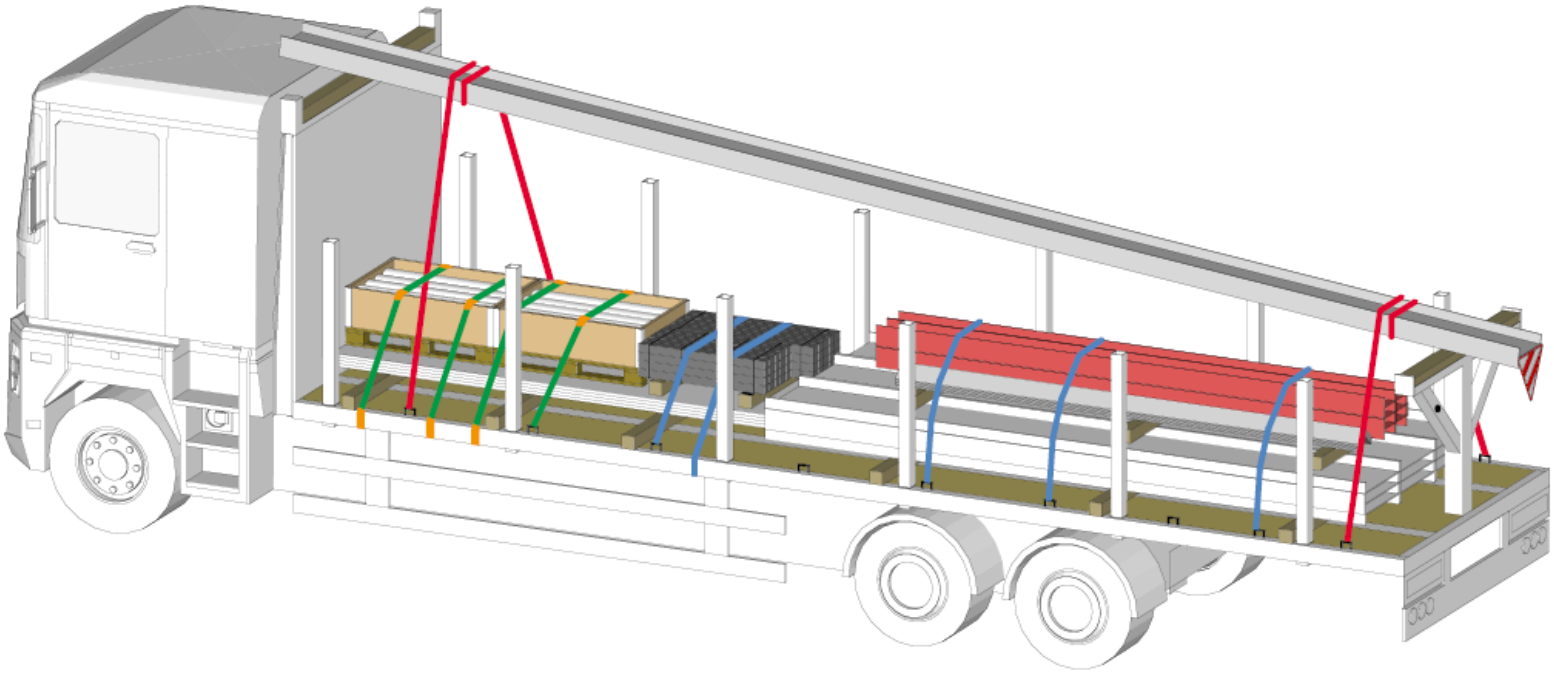

- Overhead material is restrained with a belly-wrap at each end.
- All material is secured at 2 points minimum.
- Webbing straps have been used to restrain product loaded against the headboard.